Reinette
Pharmatech Pvt. Ltd.

Reinette Pharmatech Pvt. Ltd.







CAPACITY
30 Kgs
to
300 Kgs



www.reinette.co.in

Reinette
Pharmatech Pvt. Ltd.

OUR PHARMA MACHINERY EXPERTISE

Pharmaceutical Manufacturing Plants & Machineries That We Have Experties In.

- Pharmaceutical Granulation Line
- Liquid Syrup Mfg. Plant
- Ointment/Cream Mfg. Plant
- Multi Mill (MML)
- Rapid Mixer Granulator (RMG)
- Octagonal Blender (OCB)
- Double Cone Blender (DCB)
- Mass Mixer
- Ribbon Blender
- Fluid Bed Dryer (FBD)
- Vacuum Tray Dryer (VTD)
- Air Tray Dryer (ATD)
- Vibro Sifter
- Premium Vibro Sifter
- Coating Pan
- Autocoater
- Starch paste Kettle
- Sparkler Filter Press (Zero Holdup Filter Press)

Sr. No. 35, Hiss No. 3, Opp. Arihant Industrial Estate, Dhumal Nagar, Vasai East, Palghar, Maharashtra - 401208
info@reinette.co.in // +91 9759600291

Reinette
Pharmatech Pvt. Ltd.

ABOUT US

Reinette Pharmatech Pvt. Ltd. founded in 2019 with 10,000 SQ feet of manufacturing area to manufacture pharma processing, cosmeticc, food processing machinery. The company comes with stand of the founder of Reinette Pharmatech Pvt. Ltd. He has over of 14 year experience in the manufacturing and marketng of pharma machine by 2008. Reinette Pharmatech Pvt. Ltd. has grown exponentially. The well- equipped the machine shop at plant has latest CNC machines, fabrication shop and contempt.

Our Production Facilities:

- Uttarakhand, India:
  - Plot No - 47, Sector - 8A, IIE Sidcul, Haridwar, Uttrakhand, PIN - 249403, INDIA
- Maharashtra, India:
  - Plot No. 35, Hiss No. 3, Opp. Arihant Industrial Estate, Dhumal nagar, Vasai East, Palghar, Maharashtra - 401208, INDIA

Reinette
Pharmatech Pvt. Ltd.

PHARMACEUTICAL GRANULATION LINE

A pharmaceutical granulation line plays a crucial role in transforming fine powders into effective oral solid dosage forms like tablets and capsules. This complex process involves several stages, each performed by specialized equipment, to ensure consistent quality and safety. Here's a breakdown of the key steps:

Salient Features:

- Process Optimization and Control:
  - Closed-loop systems: Minimize product loss and exposure, ensuring containment and safety.
  - Integrated process control: Automates recipe management, parameter adjustment, and data logging for consistent quality.
  - Continuous monitoring: Real-time data acquisition allows for timely interventions and improved process control.
- Advanced Technologies:
  - High-shear granulators: Achieve superior granule uniformity and rapid processing.
  - Fluid bed dryers: Offer precise temperature control and efficient moisture removal.
  - Advanced coating techniques: Enable targeted drug delivery and improved stability.
- Safety and Efficiency:
  - Dust-free operation: Protects operators and minimizes product contamination.
  - Explosion protection: Ensures safety for potentially flammable ingredients.
  - Ergonomic design: Minimizes operator fatigue and promotes safe interaction with the line.
- Flexibility and Scalability:
  - Modular design: Allows for customization and adaptation to different formulations and production scales.
  - Multi-purpose equipment: Single machines can handle multiple granulation and drying processes.
  - Easy cleaning and changeover: Minimizes downtime and facilitates efficient production runs.
- Data Management and Compliance:
  - Integration with MES (Manufacturing Execution System): Enables comprehensive data tracking and reporting for regulatory compliance.
  - Paperless documentation: Improves traceability and streamlines quality control processes.
  - Validation capabilities: Supports adherence to cGMP and other regulatory requirements.
- Additionally:
  - Energy efficiency: Modern lines incorporate low-energy equipment and processes to minimize environmental impact.
  - Remote access and monitoring: Enables centralized control and troubleshooting for geographically dispersed facilities.



Reinette
Pharmatech Pvt. Ltd.

LIQUID SYRUP MFG. PLANT

Liquid syrup manufacturing plants transform simple ingredients like sugar and water into a diverse range of syrups used in various applications, from food and beverages to pharmaceuticals.

Salient Features:

Efficiency and Optimization:

- Closed-loop systems: Minimize product loss and exposure, ensuring containment and safety.
- Integrated process control: Automates recipe management, parameter adjustment, and data logging for consistent quality and efficient production.
- Continuous monitoring: Real-time data acquisition allows for timely interventions and improved process optimization.

Advanced Technologies:

- Multi-stage filtration: Utilizes different filter types (sand, pre-coat, membrane) for precise impurity removal and clarity.
- Falling film evaporators: Achieve efficient water removal and minimize syrup heat exposure for better color and flavor preservation.
- High-shear homogenizers: Ensure superior emulsion stability and smooth texture even with high-solid content syrups.

Safety and Quality:

- Stainless steel construction: Minimizes risk of contamination and provides easy cleaning.
- HEPA filtration: Ensures clean air environment for syrup processing and packaging.
- CIP (Cleaning In Place) systems: Automate cleaning procedures for efficient and thorough sanitation.

Flexibility and Sustainability:

- Modular line design: Allows for customization based on product range and production capacity.
- Multi-purpose equipment: Single machines can handle different syrups and reduce production line footprints.
- Energy-efficient systems: Utilize low-energy equipment and processes to minimize environmental impact.

Integration and Data Management:

- MES (Manufacturing Execution System) integration: Enables comprehensive data tracking, reporting, and traceability for regulatory compliance.
- Paperless documentation: Improves process transparency and streamlines quality control processes.
- Remote access and monitoring: Enables centralized control and troubleshooting for geographically dispersed facilities.
-



info@reinette.co.in // +91-9759600291

Reinette
Pharmatech Pvt. Ltd.

OINTMENT / CREAM MFG. PLANT

From Powders to Paste: Inside an Ointment/Cream Manufacturing Plant
Ointment and cream manufacturing plants transform a variety of raw materials into therapeutic topical products used for various purposes.

Salient Features:

Efficiency and Optimization:

- Closed-loop systems: Minimize product loss and exposure, ensuring containment and safety, especially for potent APIs.
- Integrated process control: Automates recipe management, parameter adjustment, and data logging for consistent quality and production optimization.
- Continuous monitoring: Real-time data acquisition allows for timely interventions and improved process control, minimizing waste and production downtime.

Advanced Technologies:

- High-shear mixers: Achieve superior uniformity and fine dispersion of ingredients, even for challenging formulations.
- Colloid mills: Ensure ultra-fine particle size and smooth texture for a luxurious feel.
- Aseptic processing: Enables sterile production of certain creams or ointments for sensitive applications.

Safety and Quality:

- Stainless steel construction: Minimizes risk of contamination and provides easy cleaning.
- HEPA filtration: Ensures clean air environment for product and personnel safety.
- CIP (Cleaning In Place) systems: Automate cleaning procedures for efficient, thorough, and validated sanitation.

Flexibility and Sustainability:

- Modular line design: Allows for customization based on product range, batch size, and future expansion needs.
- Multi-purpose equipment: Single machines can handle different formulations, reducing production line footprints and capital expenditure.
- Energy-efficient systems: Utilize low-energy equipment and processes to minimize environmental impact.

Integration and Data Management:

- MES (Manufacturing Execution System) integration: Enables comprehensive data tracking, reporting, and traceability for regulatory compliance and process improvement.
- Paperless documentation: Improves process transparency and streamlines quality control processes.
- Remote access and monitoring: Enables centralized control and troubleshooting for geographically dispersed facilities.

Additionally:

- Validation protocols: Ensure equipment, processes, and cleaning procedures meet stringent quality standards.
- Environmental monitoring: Control temperature, humidity, and pressure to maintain product stability and prevent degradation.
- Track and trace systems: Implement robust systems for product authentication and counterfeit prevention, especially for valuable formulations.



Reinette
Pharmatech Pvt. Ltd.

REINETTE MULTI MILL (RMML)

A multi mill is a versatile machine used in pharmaceutical, chemical, and food industries for processing a wide range of materials, including wet and dry granules, powders, and even pastes. Its working principle relies on a combination of cutting, impacting, and shearing mechanisms to achieve size reduction and desired particle characteristics.

Salient Features:

Versatility and Flexibility:

- Wide range of materials: Processes wet and dry granules, powders, pastes, and even some heat-sensitive materials across various industries.
- Configurable setup: Different types of blades, screens, and speed settings cater to specific processing needs and desired particle characteristics.
- Variable force mechanism: Adapts to diverse material properties and achieves varying degrees of size reduction.

High Efficiency and Performance:

- High-speed rotating blades: Achieve rapid and efficient size reduction, saving processing time and energy.
- Centrifugal force and optimized chamber design: Ensure proper material flow and interaction with the blades for consistent results.
- Minimal heat generation: Maintains material integrity and prevents thermal degradation in heat-sensitive applications.

Safety and Ease of Use:

- Enclosed processing chamber: Minimizes dust and noise generation, promoting a safer work environment.
- Interlocked safety features: Prevent accidental operation and ensure user safety.
- Easy loading and unloading: Simple hopper feed and collection systems facilitate efficient operation.
- Easy cleaning and maintenance: Designed with smooth surfaces and accessible components for quick cleaning and hygiene.

Additional Features:

- Compact and portable designs: Make them suitable for different production scales and space limitations.
- Dust extraction systems: Improve air quality and prevent product contamination.
- Integration with automated lines: Can be incorporated into continuous production processes for increased efficiency.
- Durable construction: Built with high-quality materials for long-lasting performance and minimal maintenance costs.

REINETTE MULTI MILL				
MODEL	OUTPUT (KGS/HOUR)	MOTOR HP	SCREEN DIMENSIONS	ROTOR SPEED
RMML-1HP	Upto 10 kgs/hour	1 HP	160 mm Dia X 135 height	0-2800 RPM
RMML-3HP	Upto 200 kgs/hour	3 HP	260 mm Dia X 135 height	0-2800 RPM
RMML-5HP	Upto 500 kgs/hour	5 HP	350 mm Dia X 200 height	0-2800 RPM

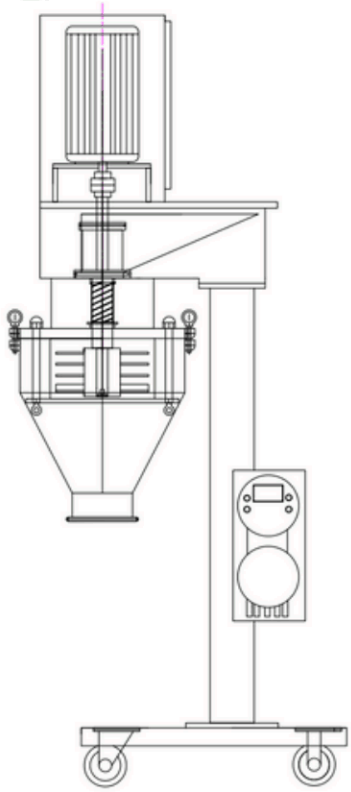

Reinette
Pharmatech Pvt. Ltd.

REINETTE RAPID MIXER GRANULATOR (RRMG)

The rapid mixer granulator (RMG) is a workhorse in the pharmaceutical industry, efficiently mixing and granulating diverse ingredients into uniform granules for subsequent processing.

Salient Features:

Efficiency and Performance:

- High-shear forces: Creates a strong vortex for rapid and uniform dry blending, achieving better homogeneity compared to traditional mixers.
- Rapid granulation: High-speed chopping ensures efficient binder distribution and granulation, typically in minutes compared to longer processes in other granulators.
- Short cycle times: Enables high production throughput, minimizing processing time and energy consumption.
- Closed-loop systems: Minimize product loss and exposure, contributing to safer and more efficient operation.

Flexibility and Versatility:

- Handles a wide range of materials: Can process various powders with different flowability properties, as well as various liquid binders.
- Configurable setups: Interchangeable impellors, choppers, and screens allow customization for specific material properties and desired granulation characteristics.
- Adaptable to different formulations: Can handle wet or dry granulation processes, depending on ingredient compatibility and desired product properties.

Preciseness and Control:

- Precise size control: High-speed chopping with variable speed settings allows for achieving the desired granulation size and size distribution.
- Integrated process control: Automates recipe management, parameter adjustments, and data monitoring for consistent quality and efficient operation.
- Real-time data analysis: Enables proactive adjustments and interventions based on process data, minimizing waste and production downtime.

Additional Features:

- Ease of cleaning: Design with smooth, easily reachable components promotes quick and thorough cleaning between batches.
- Durable construction: Built with high-quality materials for long-lasting performance and minimal maintenance costs.
- Modular design: Allows for customization and expansion based on changing production needs.
- Data management and MES compatibility: Enables centralized data collection, analysis, andreporting for cGMP adherence and process improvement.

Sustainability:

- Reduced solvent use: Some RMTGs offer options for minimizing solvent usage in the granulation process, contributing to environmental sustainability.
- Improved energy efficiency: Newer models feature energy-optimized motors and components, minimizing power consumption.

MODEL	GROSS VOLUME (LTR)	WORKING VOLUME (LTR)	MAIN MOTOR HP	GEAR BOX SIZE	CHOPPER MOTOR HP
RRMG-25	25 Ltr.	17.5 Ltr.	3/5 HP	4"	1.5/2 HP
RRMG-100	100 Ltr.	70 Ltr.	7.5/10 HP	5"	2/3 HP
RRMG-150	150 Ltr.	105 Ltr.	10/15 HP	5"	3/5 HP
RRMG-250	250 Ltr.	175 Ltr.	25/30 HP	7"	3/5 HP
RRMG-400	400 ltr.	280 Ltr.	30/40 HP	8"	5/7.5 HP
RRMG-600	600 Ltr.	420 ltr.	40/50 HP	10"	5/7.5 HP
RRMG-1000	1000 Ltr.	700 ltr.	63/85 HP	12"	10/15 HP

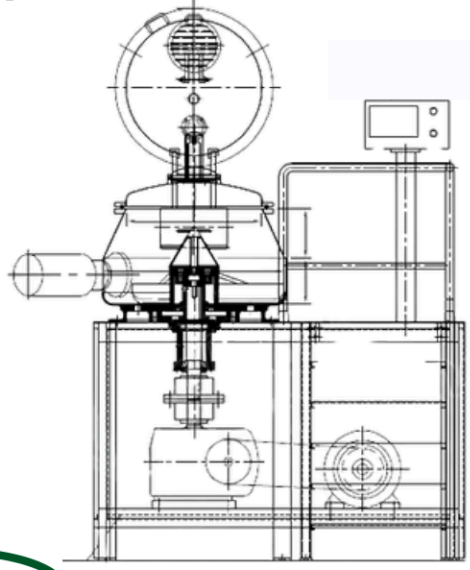

info@reinette.co.in // +91-9759600291

REINETTE OCTAGONAL BLENDER (ROCB)

The octagonal blender, also known as an Octabin blender, plays a crucial role in pharmaceutical and other industries by gently mixing and blending dry granules for uniformity.

Salient Features:

Gentle Mixing and Preservation:

- Unique octagonal shape: Promotes a cascading and folding motion, minimizing shear forces and protecting fragile granules.
- Low mixing speeds: Typically 8-15 RPM ensure gentle blending without compromising granule integrity or generating excessive dust.
- Minimal moving parts: Reduce potential points of stress or damage to delicate granules.

High Efficiency and Homogeneity:

- Effective mixing action: Continuous rotation and cascading motion ensure thorough blending and achieve high homogeneity without segregation.
- Fast mixing times: Can achieve uniform blending in 5-15 minutes, depending on batch size and material properties.
- Closed-loop systems: Some models offer dust collection and integrated vacuum systems for cleaner and more efficient operation.

Flexibility and Versatility:

- Wide range of capacities: Available in various sizes to cater to different production volumes and batch sizes.
- Configurable options: Some models offer features like bin charging, vacuum transfer systems, and inline milling for greater flexibility.
- Handles diverse materials: Suitable for dry mixing of free-flowing granules, powders, and even some lubricated granules.

Additional Features:

- cGMP compliance: Designed and constructed to meet current Good Manufacturing Practices regulations for pharmaceutical and other regulated industries.
- Easy cleaning and maintenance: Smooth surfaces and minimal moving parts facilitate thorough cleaning and minimize downtime.
- Durable construction: Built with high-quality materials for long-lasting performance and minimal maintenance costs.
- Data management and MES compatibility: Some models can integrate with production management systems for data tracking and process optimization.

MODEL	GROSS VOLUME (LTR)	WORKING VLUME (LTR)	MOTOR POWER (HP)
ROCB-100	100	70	2
ROCB-150	150	105	2
ROCB-200	200	140	2
ROCB-250	250	175	2
ROCB-300	300	210	3
ROCB-500	500	350	3
ROCB-600	600	420	3
ROCB-1000	1000	700	5
ROCB-1500	1500	1050	7.5
ROCB-2000	2000	1400	10
ROCB-3000	3000	2100	10

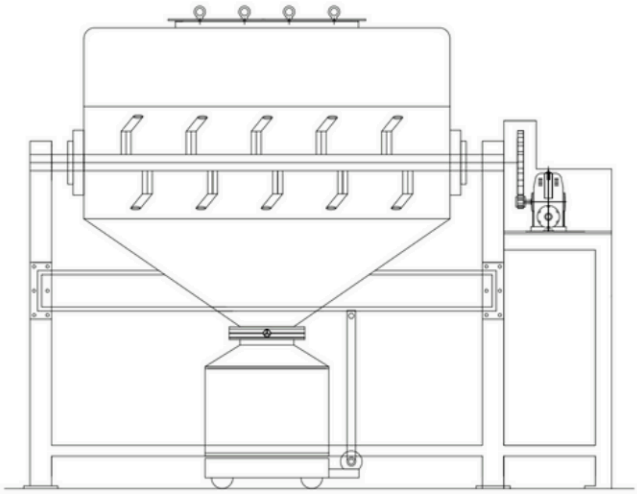

Reinette
Pharmatech Pvt. Ltd.

REINETTE DOUBLE CONE BLENDER (RDCB)

The double cone blender, plays a crucial role in various industries by efficiently mixing and blending dry powders, granules, and other free-flowing materials

Salient Features:

Mixing Efficiency and Performance:

- Unique cone shape: Promotes efficient material flow and cascading action for rapid and thorough mixing, achieving homogeneity in 5-15 minutes.
- Minimal shear forces: Gentle tumbling motion protects fragile materials from degradation, ensuring their integrity and functionality.
- Optional baffles/intensity bars: Enhance mixing action for materials with varying densities or flow properties, further reducing segregation.
- Closed-loop systems: Some models offer dust collection and integrated vacuum systems for cleaner and more efficient operation.

Flexibility and Versatility:

- Wide range of materials: Handles dry powders, granules, and other free-flowing materials across various industries like pharmaceuticals, food, chemicals, and plastics.
- Size variety: Available in various capacities to cater to different batch sizes and production needs.
- Configurable options: Some models offer features like bin charging, vacuum transfer systems, and inline milling for greater flexibility.

Additional Key Features:

- cGMP compliance: Designed and constructed to meet current Good Manufacturing Practices regulations for safe and controlled production.
- Easy cleaning and maintenance: Smooth surfaces and minimal moving parts facilitate thorough cleaning and minimize downtime.
- Durable construction: Built with high-quality materials for long-lasting performance and minimal maintenance costs.
- Data management and MES compatibility: Some models can integrate with production management systems for data tracking and process optimization.

Important considerations:

- Specific features vary based on model and manufacturer. Evaluate factors like desired mixing depth, material sensitivity, budget, and regulatory requirements.
- Consulting with manufacturers or industry experts can help you choose the optimal double cone blender for your specific application.

MODEL	GROSS VOLUME (LTR)	WORKING VOLUME (LTR)	MOTOR POWER (HP)	DISCHARGE SIZE
RDCB-50	50	35	1	4"
RDCB-100	100	70	1	6"
RDCB-250	250	175	2	6"
RDCB-500	500	350	3	6"
RDCB-1000	1000	700	5	6"
RDCB-1500	1500	1050	7.5	10"
RDCB-2000	2000	1400	15	12"
RDCB-5000	5000	3500	20	12"
RDCB-6000	6000	4200	20	12"

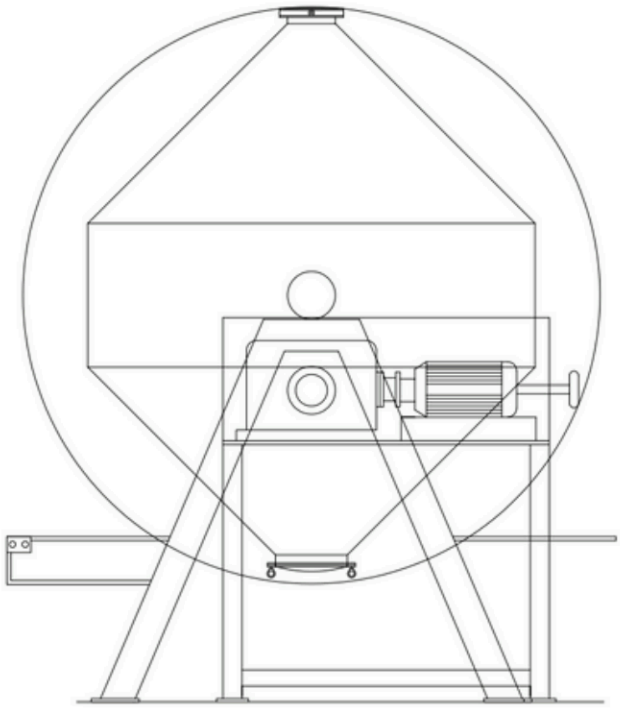

info@reinette.co.in // +91-9759600291

Reinette
Pharmatech Pvt. Ltd.

REINETTE MASS MIXER (RMM)

Mass mixers, also known as paddle mixers, are workhorses in various industries, excelling in efficiently mixing large volumes of dry powders, granules, and viscous materials.

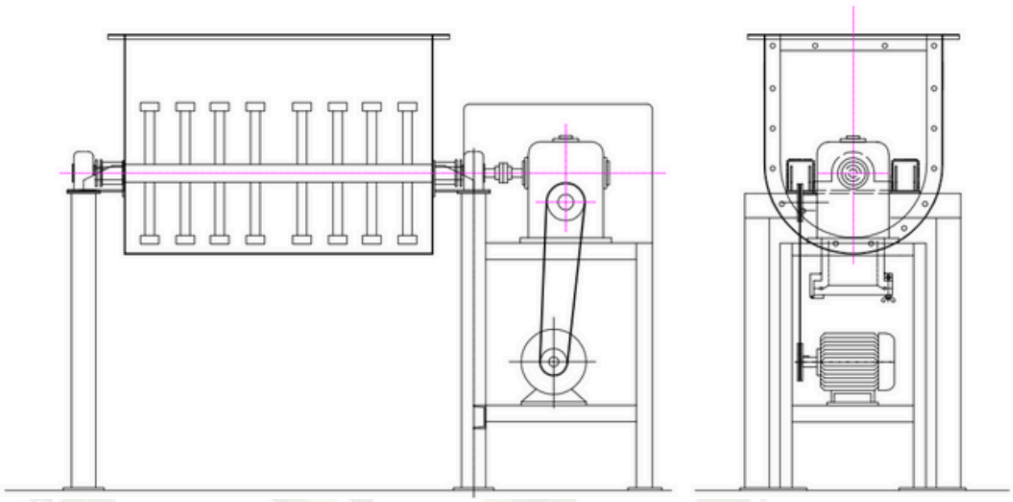

Salient Features:

Mixing Performance and Efficiency:

- Convective flow: Ribbon agitators generate a complex flow pattern, lifting and folding material for thorough mixing throughout the large cross-sectional area, minimizing dead zones.
- High capacity: Accommodates large volumes (up to several tons) efficiently, meeting high-production demands.
- Rapid mixing: Achieves uniform blends in short timeframes (5-15 minutes), optimizing production cycles.
- Optional chopper blades: Further enhance mixing for agglomerates or finer blends.
- Closed-loop systems: Some models offer dust collection and integrated vacuum systems for cleaner and more efficient operation.

Versatility and Material Handling:

- Wide material range: Handles dry powders, granules, viscous pastes, and even some heat-sensitive materials across various industries.
- Configurable options: Different agitator designs, speeds, and chopper configurations adapt to specific materials and mixing needs.
- Tilting/rotating discharge: Facilitates efficient unloading of viscous materials.

Additional Key Features:

- cGMP compliance: Designed and constructed to meet current Good Manufacturing Practices regulations for safe and controlled production.
- Easy cleaning and maintenance: Smooth surfaces and accessible design allow for thorough cleaning, minimizing downtime.
- Durable construction: Built with high-quality materials for long-lasting performance and minimal maintenance costs.
- Data management and MES compatibility: Some models can integrate with production management systems for data tracking and process optimization.

MODEL	FROSS VOLUME (LTR)	WORKING VOLUME (LTR)	MOTOR POWER (HP)
RMM-50	50	35	1
RMM-75	75	52.5	1
RMM-150	150	105	2
RMM-250	250	175	3
RMM-450	450	315	5
RMM-600	600	420	7.5
RMM-1100	1100	770	10
RMM-1500	1500	1050	12.5
RMM-2000	2000	1400	15

Reinette
Pharmatech Pvt. Ltd.

REINETTE RIBBON BLENDER (RRB)

The ribbon blender, also known as a paddle mixer, excels in efficiently mixing large volumes of dry powders, granules, and even viscous materials. Its unique design and mixing action make it a powerful tool in various industries.

Salient Features:

Mixing Performance and Efficiency:

- Convective flow: The unique, combined action of inner and outer ribbons creates a complex flow pattern, ensuring thorough mixing throughout the large cross-section and minimizing dead zones.
- High capacity: Capable of handling large volumes (up to several tons) efficiently, meeting high-production demands.
- Rapid mixing: Achieves uniform blends in short timeframes (5-15 minutes), optimizing production cycles.
- Optional chopper blades: Further enhance mixing for agglomerates or finer blends.
- Closed-loop systems: Some models offer dust collection and integrated vacuum systems for cleaner and more efficient operation.

Versatility and Material Handling:

- Wide material range: Handles dry powders, granules, viscous pastes, and even some heat-sensitive materials across various industries.
- Configurable options: Different ribbon designs, speeds, and chopper configurations adapt to specific materials and mixing needs.
- Tilting/rotating discharge: Facilitates efficient unloading of viscous materials.

Additional Key Features:

- cGMP compliance: Designed and constructed to meet current Good Manufacturing Practices regulations for safe and controlled production.
- Easy cleaning and maintenance: Smooth surfaces and accessible design allow for thorough cleaning, minimizing downtime.
- Durable construction: Built with high-quality materials for long-lasting performance and minimal maintenance costs.
- Data management and MES compatibility: Some models can integrate with production management systems for data tracking and process optimization.

MODEL	FROSS VOLUME (LTR)	WORKING VOLUME (LTR)	MOTOR POWER (HP)
RRB-50	50	35	1
RRB-75	75	52.5	1
RRB-150	150	105	2
RRB-250	250	175	3
RRB-450	450	315	5
RRB-600	600	420	7.5
RRB-1100	1100	770	10
RRB-1500	1500	1050	12.5
RRB-2000	2000	1400	15

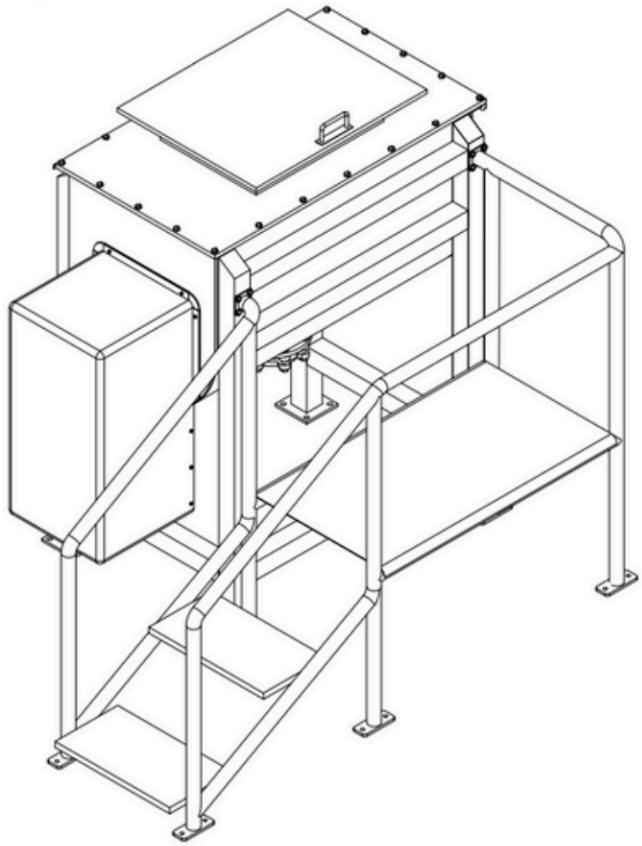

REINETTE FLUID BED DRYER (RFBD)

The fluid bed dryer operates on the principle of fluidization, where a stream of gas (usually air) passes through a perforated bed of the material you want to dry, suspending the particles in a fluid-like state. This process offers several advantages over traditional drying methods.

Salient Features:

Enhanced Drying Performance:

- Individual particle suspension: Ensures uniform heat transfer and consistent drying throughout the entire batch, eliminating hot spots and promoting quality.
- High heat transfer efficiency: Fluidized state maximizes contact area between particles and hot air, leading to faster and more efficient drying compared to static methods.
- Precise control: Adjustable air temperature, flow rate, and residence time allow for accurate drying to precise moisture content specifications.

Gentle and Versatile Processing:

- Fluidized bed: Minimizes product damage and degradation caused by abrasion or mechanical stress in traditional dryers.
- Wide material compatibility: Handles diverse materials, including powders, granules, heat-sensitive products, and shear-sensitive items.
- Flexible configurations: Various heating options (electric, steam, hot oil) and inert gas capabilities cater to specific material needs and drying environments.

Additional Key Features:

- Energy efficiency: Closed-loop systems recycle a portion of exhaust air, minimizing energy consumption.
- Continuous or batch processing: Adaptable to various production volumes and requirements.
- Easy cleaning and maintenance: Smooth surfaces and accessible design facilitate rapid cleaning and minimize downtime.
- cGMP compliance: Models meeting regulatory standards are available for pharmaceutical and other controlled environments.
- Data management and MES compatibility: Some models integrate with production management systems for data tracking and process optimization.

MODEL	CONTAINER VOLUME (LTR)	BATCH CAPACITY (KG)	DRYING TEMP. (DEG. C)
RFBD-30	100	30	Atm. 85
RFBD-60	220	60	Atm. 85
RFBD-120	410	120	Atm. 85
RFBD-200	590	200	Atm. 85
RFBD-250	750	250	Atm. 85
RFBD-300	950	300	Atm. 85
RFBD-500	1500	500	Atm. 85

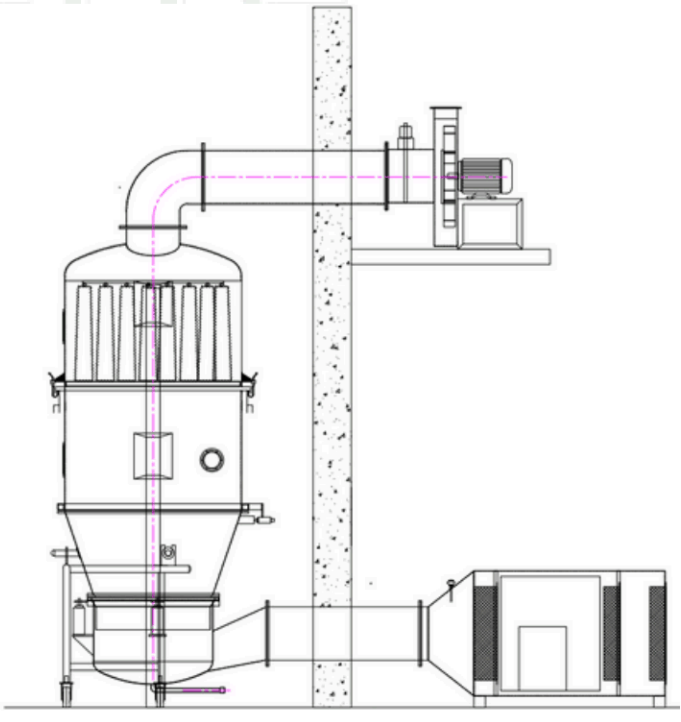

info@reinette.co.in // +91-9759600291

REINETTE VACUUM TRAY DRYER (RVTD)

The vacuum tray dryer, also known as a vacuum shelf dryer, utilizes the principles of reduced pressure and controlled heating to efficiently dry heat-sensitive or moisture-sensitive materials.

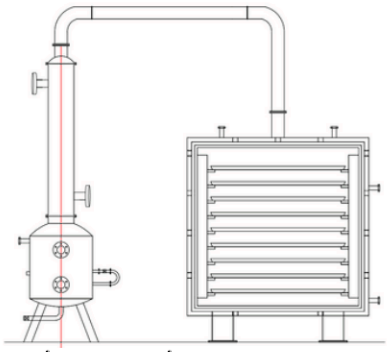

Salient Features:

Enhanced Drying Performance and Control:

- Reduced pressure: Lowers boiling point, enabling drying at lower temperatures, minimizing thermal degradation and preserving product quality.
- Faster drying: Increased vapor pressure gradient and efficient moisture removal lead to shorter drying times compared to atmospheric dryers.
- Precise control: Adjustable vacuum level, heating systems, and drying parameters permit accurate control for consistent drying performance and desired final moisture content.
- Uniform drying: Closed-loop system with controlled heating ensures consistent heat distribution and uniform drying throughout the batch, eliminating hot spots.

Gentle Processing and Versatility:

- Heat-sensitive materials: Ideal for drying delicate products susceptible to thermal damage due to the lower drying temperatures.
- Moisture-sensitive materials: Efficiently removes moisture from materials prone to degradation from high moisture content.
- Wide material compatibility: Handles diverse materials, including pharmaceuticals, chemicals, biological samples, and even some heat-sensitive food products.
- Inert gas drying: Option for materials sensitive to oxidation, ensuring product stability and purity.

Additional Key Features:

- Energy efficiency: Closed-loop system, condenser recovery, and optimized heating elements contribute to overall energy savings.
- Clean operation: Minimizes product loss and environmental emissions with solvent recovery systems and closed-loop design.
- Easy cleaning and maintenance: Smooth surfaces and accessible trays facilitate thorough cleaning and minimize downtime.
- cGMP compliance: Models meeting regulatory standards are available for pharmaceutical and other controlled environments.
- Data management and MES compatibility: Some models integrate with production management systems for data tracking and process optimization.

MODEL	NO. OF TRAYS	CAPACITY (KG)	TRAY SIZE : L W H IN MM	NO. OF HEATING SHELFS	SHELF SIZE IN MM	CONDENSER	RECEIVER	H.W. DISTRIBUTION PIPES
RVTD-3	3	3-5	406x406x31	4	430x430	0.2 sq. m	10 ltr	1.5"
RVTD-6	6	12-18	812x406x31	7	430 X835	0.5 sq. m	25 ltr	1.5"
RVTD-12	12	25-35	812x406x31	7	835x835	0.75 sq. m	50 ltr	1.5"
RVTD-24	24	50-75	812x406x31	9	835x1259	1 sq. m	75 ltr	1.5"
RVTD-36	36	75-100	812x406x31	13	835x1250	1.5 sq. m	100 ltr	1.5"
RVTD-48	48	100-150	812x406x31	17	835x1250	2 sq. m	150 ltr	1.5"
RVTD-96	96	200-300	812x406x31	17	1250x1650	3 sq. m	250 ltr	2"

Reinette
Pharmatech Pvt. Ltd.

REINETTE AIR TRAY DRYER (RATD)

An air tray dryer, also known as a convection dryer or tray oven dryer, employs circulating hot air to remove moisture from various materials placed on trays within the drying chamber.

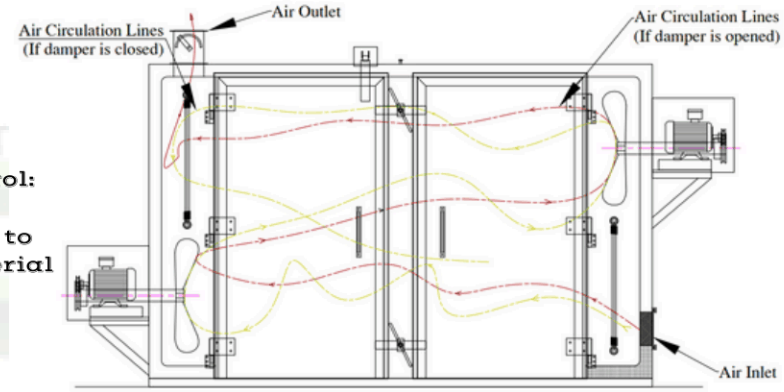

Salient Features:

Enhanced Drying Performance and Control:

- Adjustable temperature and airflow: Control heating elements and fan speeds to tailor the drying process to specific material needs and optimize efficiency.
- Uniform drying: Forced air circulation promotes consistent heat and moisture distribution across all trays, minimizing variations within the batch.
- Multi-zone options: Advanced models offer independent temperature control in different zones for drying materials with varying sensitivities or requiring sequential drying stages.
- Dehumidification systems: Some models recirculate dried air, reducing energy consumption and enabling precise control of final product moisture content.

Versatility and Operational Advantages:

- Wide material compatibility: Handles diverse materials like powders, granules, pastes, and even some heat-resistant products across various industries.
- Simple operation: User-friendly design and readily available controls ease operation and training for personnel.
- Cost-effective: Generally more affordable than vacuum or freeze dryers, offering a practical solution for many drying applications.
- Scalability: Available in various sizes to cater to different production volumes and batch sizes.

MODEL		RATD-6	RATD-12	RATD-24	RATD-48	RATD-96	RATD-192
Capacity / No. of Trays		6	12	24	48	96	192
Tray Size (mm)		406 X 812 X 32 mm OR 16" X 32 " X 1.25"					
External Dimensions (mm)			1370 (W) x 530 (D) x 940 (H)	1370 (W) x 940 (D) x 940 (H)	1980 (W) x 1020 (D) x 1880 (H)	3320 (W) x 1900 (D) x 1880 (H)	3320 (W) x 1900 (D) x 1880 (H)
Internal Dimensions (mm)			840 x 430 x 840	840 x 860 x 840	1020 x 930 x 1830	1960 x 930 x 1830	1960 x 930 x 1830
Motor Power (HP)		0.5	0.5	0.5	1	1 X 2 Nos.	1 X 4 Nos.
No. of Trollys		Nill	Nill	Nill / 1	1	2	4
Heating Load (kw)	100°C	-	3	6	9	18	36
	200°C	-	6	9	15	24	42
	300°C	-	9	12	21	30	48
No. of Doors		1	1	1	1	2	2
No. of Blowers		1	1	1	1	2	4
No. of Steam Heaters		-	2				
Steam Pressure (kg/cm²)		3.3					
Steam Consumption (Lbs/Hr)		-	25	45	60	80	120
Insulation (mm)	100°C		50	50	50	50	50
	200°C		75	75	75	75	75
	300°C		75	75	75	75	75
Trolly Dimensions		-	Fixed Rack	Fixed Rack	840 x 960 x 1780	840 x 960 x 1780	840 x 960 x 1780
Temperature Sensor		PT - 100					
Power Supply		220 / 440 Volts 50 Hz (Single or Three Phase)					
Loading Capacity			25	60	120	240	480

www.reinette.co.in
info@reinette.co.in // +91-9759600291

REINETTE VIBRO SIFTER (RVS)

The vibro sifter, also known as a vibratory sifter or gyro sifter, efficiently separates materials based on particle size through vibrational motion.

Salient Features:

Separation Performance and Capacity:

- Number of decks: Determines the number of size fractions achievable (typically 1-6 decks).
- Mesh size: Specifies the opening size of each sieve deck, defining the particle sizes separated.
- Mesh material: Options like stainless steel, nylon, or woven wire cater to specific material compatibility and durability needs.
- Capacity: Indicates the maximum material volume the sifter can handle per hour.
- Separation efficiency: Refers to the accuracy of particle size separation and the amount of oversize/undersize material present in each fraction.

Vibratory System and Design:

- Vibration type: Can be horizontal, vertical, or gyratory, impacting material movement and sieving efficiency.
- Motor power and amplitude: Determine the intensity and effectiveness of the vibration.
- Spring design: Influences vibration frequency and material flow across the screens.
- Frame construction: Material and design impact sturdiness, durability, and noise levels.
- Footprint and weight: Consider available space and portability requirements.

Additional Key Specifications:

- Feeding systems: Options like screw feeders, vibratory feeders, or manual loading cater to different production scales and material properties.
- Discharge systems: Gravity discharge, pneumatic discharge, or integrated conveyor systems facilitate efficient product collection.
- Dust collection: Closed-loop systems with dust filters minimize dust emissions and ensure clean operation.
- Cleaning and maintenance: Ease of disassembly and access to screens for cleaning is crucial.
- Compliance and certifications: Consider specific regulations or standards your application might require.

MODEL	SCREEN SIZE	CAPACITY (KG/HOUR)	MOTOR POWER (HP)	MESH SIZE
RVS-12	12"	Upto 70 kg	0.25	#20-200
RVS-24	24"	Upto 200 kg	0.25	#20-201
RVS-30	30"	Upto 240 kg	0.5	#20-202
RVS-36	36"	Upto 300 kg	0.5	#20-203
RVS-48	48"	Upto 400 kg	1.5	#20-204
RVS-60	60"	Upto 550 kg	1.5	#20-205

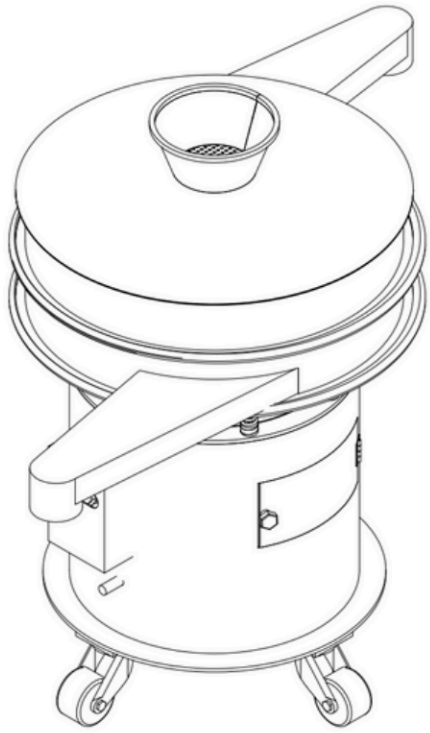

REINETTE VIBRO SIFTER (PREMIUM MODEL) - (PRVS)

The premium model of vibro sifter provide the functionality of direct discharge which increase the output rate.

Salient Features:

Separation Performance and Capacity:

- Number of decks: Determines the number of size fractions achievable (typically 1-6 decks).
- Mesh size: Specifies the opening size of each sieve deck, defining the particle sizes separated.
- Mesh material: Options like stainless steel, nylon, or woven wire cater to specific material compatibility and durability needs.
- Capacity: Indicates the maximum material volume the sifter can handle per hour.
- Separation efficiency: Refers to the accuracy of particle size separation and the amount of oversize/undersize material present in each fraction.

Vibratory System and Design:

- Vibration type: Can be horizontal, vertical, or gyratory, impacting material movement and sieving efficiency.
- Motor power and amplitude: Determine the intensity and effectiveness of the vibration.
- Spring design: Influences vibration frequency and material flow across the screens.
- Frame construction: Material and design impact sturdiness, durability, and noise levels.
- Footprint and weight: Consider available space and portability requirements.

Additional Key Specifications:

- Feeding systems: Options like screw feeders, vibratory feeders, or manual loading cater to different production scales and material properties.
- Discharge systems: Gravity discharge, pneumatic discharge, or integrated conveyor systems facilitate efficient product collection.
- Dust collection: Closed-loop systems with dust filters minimize dust emissions and ensure clean operation.
- Cleaning and maintenance: Ease of disassembly and access to screens for cleaning is crucial.
- Compliance and certifications: Consider specific regulations or standards your application might require.

MODEL	SCREEN SIZE	CAPACITY (KG/HOUR)	MOTOR POWER (HP)	MESH SIZE
RVS-12	12"	Upto 90 kg	0.25	#20-200
RVS-24	24"	Upto 250 kg	0.25	#20-201
RVS-30	30"	Upto 300 kg	0.5	#20-202
RVS-36	36"	Upto 375 kg	0.5	#20-203
RVS-48	48"	Upto 500 kg	1.5	#20-204
RVS-60	60"	Upto 690 kg	1.5	#20-205

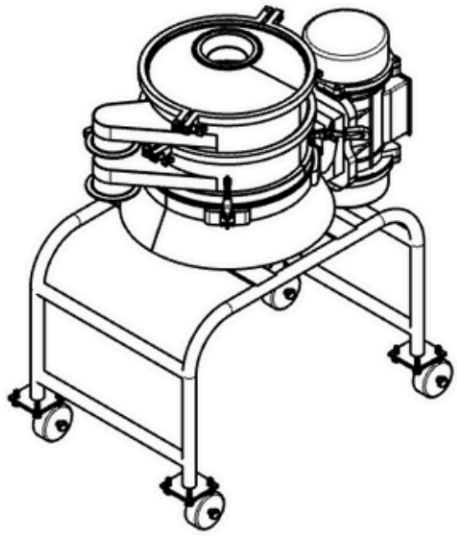

REINETTE COATING PAN - (RCP)

Coating pans, also known as pharmaceutical coating pans, are versatile tools used in various industries to apply thin layers of material onto tablets, capsules, and other objects.

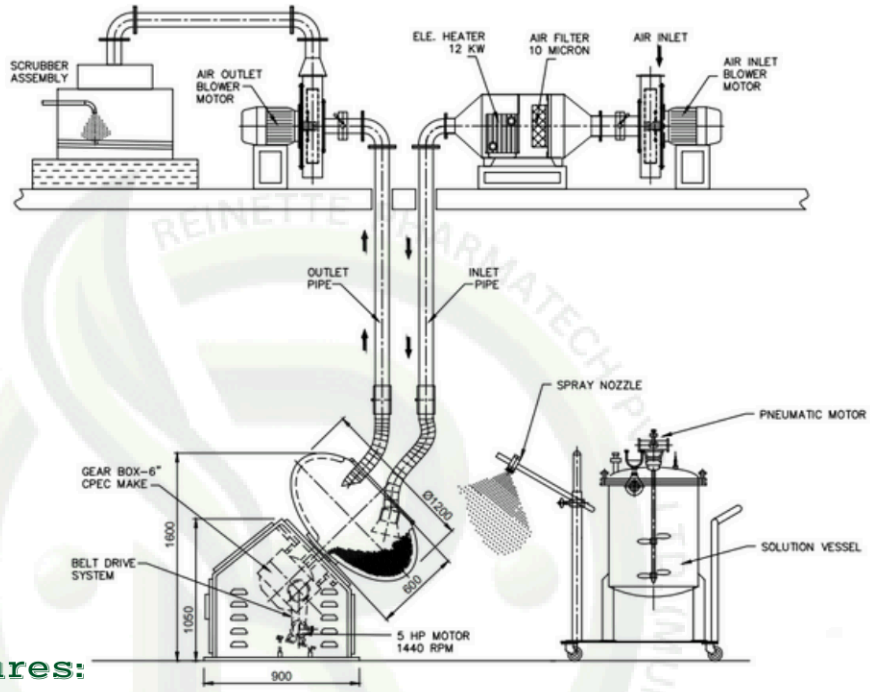

Salient Features:

Enhanced Coating Performance and Control:

- Adjustable rotation speed and tilt angle: Optimize coating distribution and prevent material buildup.
- Precise temperature control: Ensures proper drying and prevents degradation of coating materials.
- Variable airflow control: Optimizes drying efficiency and prevents excessive air impact on delicate objects.
- Spray nozzle flexibility: Different nozzle types and spray patterns achieve desired coating thickness and uniformity.

Versatility and Material Handling:

- Wide range of coating materials: Handles aqueous and organic solutions, suspensions, and powders for diverse applications.
- Adaptability to various object shapes and sizes: Coats tablets, capsules, granules, and even irregularly shaped objects.
- Optional features: Perforated pan design for enhanced air circulation, fluidized bed coating for gentle processing of fragile materials.

Additional Key Features:

- cGMP compliance: Models meeting regulatory standards are available for pharmaceutical and other controlled environments.
- Easy cleaning and maintenance: Smooth surfaces and accessible design facilitate thorough cleaning and minimize downtime.
- Data management and MES compatibility: Some models integrate with production management systems for data tracking and process optimization.
- Safety features: Options like explosion protection systems and interlocks enhance operational safety.

MODELS	RCP-30	RCP-36	RCP-42	RCP-48	RCP-60	RCP-72
CAPACITY	45 LTRS	75 LTRS.	100 LTRS.	150 LTRS	210 LTRS.	275 LTRS
PAN RPM	8 TO 20 &12 TO 30	8 TO 20 &12 TO 30	6 TO 15 &10 TO 25	6 TO 15 &10 TO 25	6 & 12	6 & 12
BLOWER CAPACITY	90 CFM	90 CFM	150 CFM	150 CFM	150 CFM	150 CFM
HEATER KW	3.5	5.5	5.5	6	6	6
BLOWER MOTOR	0.33 HP	0.3 HP	1 HP	1 HP	1 HP	1 HP
ELECTRICALS	1.5 HP	1.5 HP	2 HP	2 HP	5 HP	5HP

info@reinette.co.in // +91-9759600291

Reinette
Pharmatech Pvt. Ltd.

REINETTE AUTOCOATER - (RAC)

The tablet coating autocoater, also known as an automatic film coater, is quite similar to a regular coating pan but incorporates automation and advanced features for more efficient and consistent results.

Salient Features:

Enhanced Process Control and Consistency:

- PLC and HMI control: Programmable logic controllers (PLCs) and human-machine interfaces (HMIs) offer precise control over critical parameters like:Rotation speed and tilt angle: Optimizes coating distribution and prevents material buildup.
- Spray rate and pattern: Ensures accurate coating thickness and uniformity.
- Airflow and temperature: Maintains optimal levels for efficient drying and coating quality.
- Recipe management: Stores and recalls pre-defined settings for different coating processes, minimizing variability and human error.

- Real-time monitoring: Advanced sensors and data acquisition systems provide continuous feedback on process parameters, allowing for real-time adjustments and optimization.

Improved Efficiency and Productivity:

- Automated loading and unloading: Eliminates manual handling and reduces labor requirements.
- Faster processing times: Automated processes and optimized control lead to higher throughput compared to manual operation.
- Reduced downtime: Efficient cleaning systems and preventive maintenance strategies minimize downtime between batches.

Enhanced Quality and Traceability:

- Closed-loop control: Ensures consistent coating quality by automatically adjusting parameters based on real-time feedback.
- Data recording and reporting: Electronic systems record and track process data for regulatory compliance and quality control purposes.
- Integrated inspection systems: In-line inspection systems can detect defects in real-time, ensuring product quality and reducing waste.

Additional Key Features:

- cGMP compliance: Models meeting regulatory standards are available for pharmaceutical and other controlled environments.
- Inert gas capabilities: Protect oxygen-sensitive materials during the coating process.
- Multi-functional coatings: Some autocoaters can handle various coating types like film, sugar, and enteric coatings.
- Easy cleaning and maintenance: Smooth surfaces and accessible design facilitate thorough cleaning and minimize downtime.
- Scalability: Available in various sizes to cater to different production volumes and batch sizes.



info@reinette.co.in // +91-9759600291

Reinette
Pharmatech Pvt. Ltd.

REINETTE AUTOCOATER - (RAC)

The tablet coating autocoater, also known as an automatic film coater, is quite similar to a regular coating pan but incorporates automation and advanced features for more efficient and consistent results.

Main Technical Specifications	RAC-40	RAC-75	RAC-150	RAC-350	RAC-600
Capacity (kg/batch)	40	75	150	350	600
Coating Pan Diameter (mm)	850	950	1200	1580	1580
Coating Pan Depth (mm)	705	780	1030	1300	1900
Coating Pan Opening Diameter (mm)	380	482	600	700	850
Coating Pan Rotation (rpm)	4-23	4-23	2-15	2-11	2-10
Motor of Hot Air Cabinet (kW)	1.1	1.1	1.1	2.2	5.5
Motor of Main Machine (kW)	0.75	0.75	2.2	4	5.5
Motor of Exhaust machine (kW)	3	3	5.5	7.5	15
Motor of Peristaltic Pump (kW)	0.18	0.18	0.18	0.18	0.18
Volume of the Solution Tank (L)/max (L)	40/55	40/80	60/120	100/200	220/300
Fan Capacity (m3/hr)	2000-2500	2000-2500	2500 - 3000	3500/4000	3500-5000
Number of Spray Gun	2	2	3	4	6
Dimension of Hot Air Machine (mm)	1100 x 900 x 2340	1100x900x2340	1150×1100 x 2510	1610 x1085 x 2710	1400×1400 x2670
Dimension of Exhaust Machine (mm)	780 x 720 x 1950	780x720x1950	915 x 800 x 2030	1050 x 1000 x 2100	1250×1200 x2200
Dimension of Main Machine (mm)	1120 x8S0 x 1715	1200x965x1750	1570 x 1260 x 2000	2000 x 1560 x 2300	2000×2240 x2320
Main Machine Weight (kg)	650	650	750	1500	2500
Hot Air Machine Weight (kg)	200	200	300	500	800
Exhaust Machine Weight (kg)	250	250	400	600	800
Power of hot air unit electric heating system (Kw)	20	20	30	50	60
Pressure (Mpa)	>0.4	>0.4	>0.4	>0.4	>0.4
Air Consumption (kg/min.)	80	80	100	200	400

info@reinette.co.in // +91-9759600291